M-13366	1

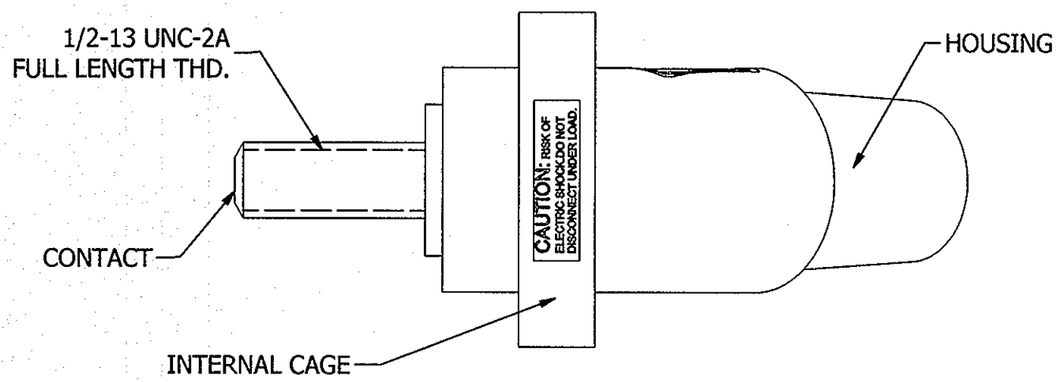

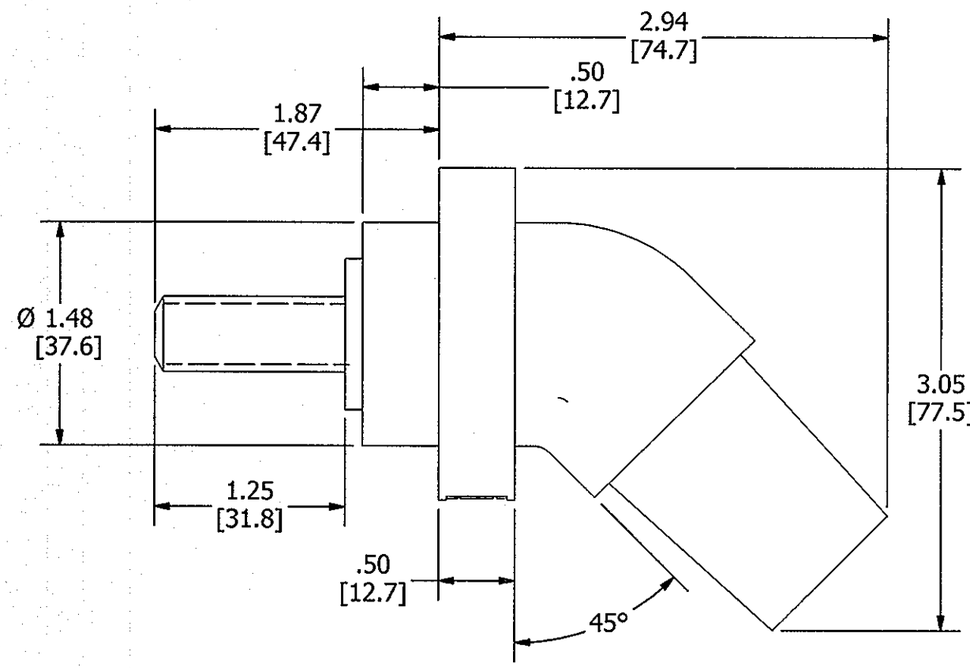

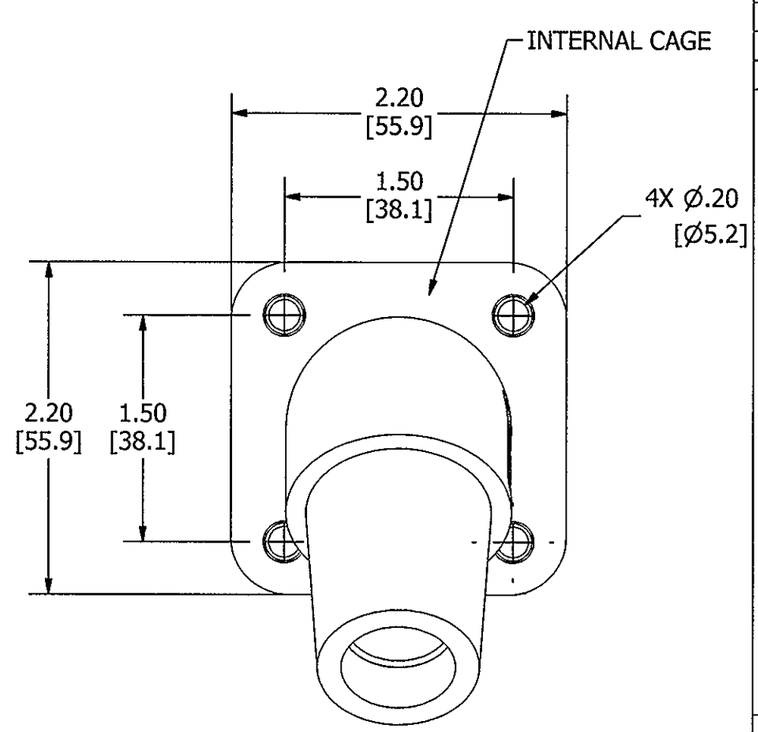

NOTES:

1. DIMENSIONS ARE IN INCHES ±.02 [mm] ±.5
2. RATING: 600VAC/250VDC, 400 AMP.
3. UL/c-ul ENCLOSURE TYPES 3R, 4X, 12, SEE INSTRUCTION SHEET.

HUBBELL CAT. NO	COLOR
HBLFRASBK	BLACK
HBLFRASBL	BLUE
HBLFRASBN	BROWN
HBFRASGN	GREEN
HBLFRASO	ORANGE
HBLFRASR	RED
HBLFRASW	WHITE
HBLFRASY	YELLOW

LIST OF PARTS

DESCRIPTION	MATERIAL	FINISH
HOUSING	TPE	SEE TABLE
CONTACT	BRASS	
INTERNAL CAGE	NYLON	

SEE TABLE

DIMENSION SHEET FOR CAT. NO.

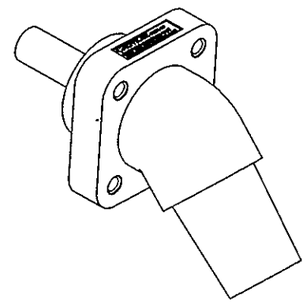

1/2 SCALE SHOWN

REPAIRABLE ☐ NON-REPAIRABLE ☒

SYM	DESCRIPTION	APPROVED	DATE
1	RELEASED PER DCN# 22075 CAC	CAC TLS	05/16/16

THE DESIGN AND DIMENSIONS OF THE PRODUCT SHOWN ON THIS DRAWING ARE SUBJECT TO CHANGE WITHOUT NOTICE

TITLE SINGLE POLE ANGLED FEMALE RECEPTACLE W/STUD

TOLERANCES UNLESS OTHERWISE SPECIFIED
FRACTIONS ± 1/64
DECIMALS ± .030
ANGLES ± 2°

WIRING DEVICE-KELLEMS
HUBBELL INCORPORATED
SHELTON, CT

DR. BY	CAC	APP. BY	TLS
TR. BY		SCALE	1:1
CHK'D BY	TLS	DATE	4/6/2016

B

M-13366

1

CODE 74545